REVISIONS				
REV	ECN	DESCRIPTION	DATE	DRFT

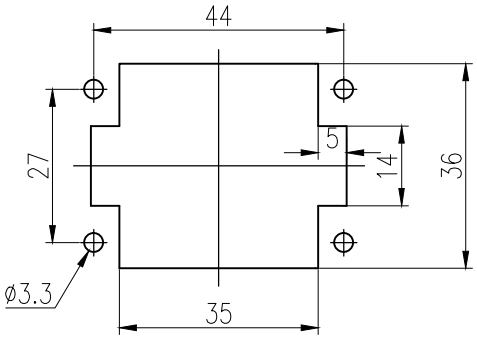

面板安装开孔图
Panel cut out

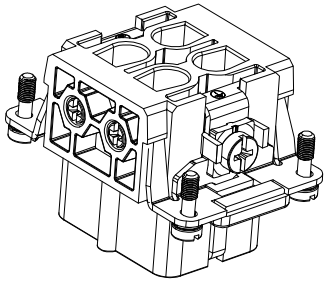

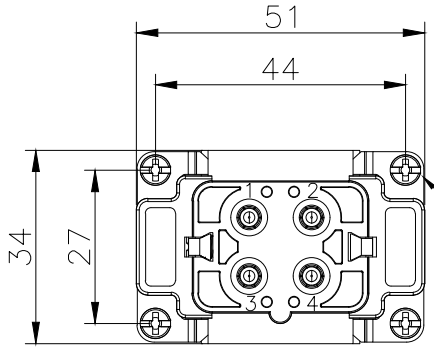

4XM3 SCREW,RECOMMENDED
TIGHTENING TORQUE 0.5N.m
4XM3螺丝，推荐锁紧力矩0.5N.m

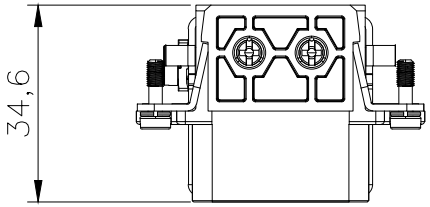

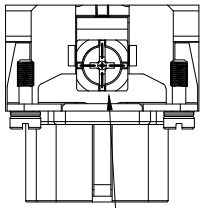

M4 SCREW,RECOMMENDED
TIGHTENING TORQUE 1.2N.m
M4螺丝，推荐锁紧力矩1.2N.m

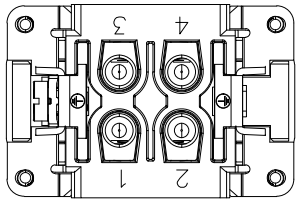

技术参数:
插芯:
- 插针数: 4+PE
- 额定电流: 35A
- 额定电压: 500V
- 额定脉冲电压: 6kV
- 污染等级: 3
- 依据UL/CSA的额定电压: 600V
- 绝缘阻抗: ≥10^{10}Ω
- 材料: 聚碳酸酯
- 颜色: RAL 7032（浅灰色）
- 温度范围: −40℃ − +125℃
- 依据UL 94的阻燃等级: V0
- 可插拔次数: ≥500

插针:
- 接线方式: 螺钉连接
- 材料: 铜合金
- 表面处理: 镀银
- 接触电阻: ≤1mΩ
- 线径范围: 1.5−6mm^2(10 AWG)
- 拧紧力矩: 1.2N · m
- 剥线长度: 11.5mm
- 带导线保护: 否

Technical specification:
Insters:
- No. of contact: 4+PE
- Rated current: 35A
- Rated voltage: 500V
- Rated impulse voltage: 6kV
- Pollution degree: 3
- Rated voltage acc.to UL/CSA: 600V
- Insulation resistance: ≥10^{10}Ω
- Material: polycarbonate
- Colour: RAL 7032(light grey)
- Temperature range: −40℃ − +125℃
- Flammability acc.to UL 94: V0
- Mating cycles: ≥500

Contacts:
- Terminal: screw terminal
- Material: copper alloy
- Surface: hard-silver plated
- Contact resistance: ≤1mΩ
- Wire gauge: 1.5−6mm^2(10 AWG)
- Tightening torque: 1.2N · m
- Stripping length: 11.5mm
- Wire protection: No

ZJHK	浙江昊科电气有限公司 ZHEJIANG HAOKE ELECTRICAL CO.,LTD				图号 Drawing No:	/	
产品代号 Part Code:	HSBS−004−F				产品料号 PART NO:	/	
Date:	2025.05.13	Scale	REV	Weight	Qty	Drawn:	SHEET
	All Dimensions in mm Original Size DIN A 4	1:1.5	HK−1	/	/	Tang	1/1