REVISIONS				
REV	ECN	DESCRIPTION	DATE	DRFT

M4 SCREW,RECOMMENDED
TIGHTENING TORQUE 1.2N.m
M4螺丝，推荐锁紧力矩1.2N.m

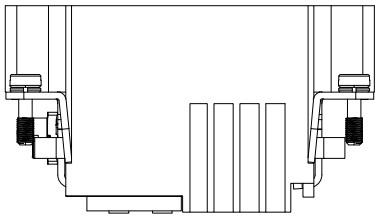

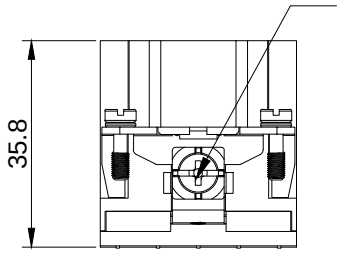

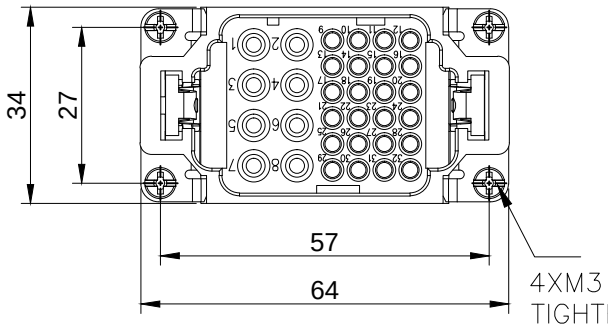

4XM3 SCREW,RECOMMENDED
TIGHTENING TORQUE 0.5N.m
4XM3螺丝，推荐锁紧力矩0.5N.m

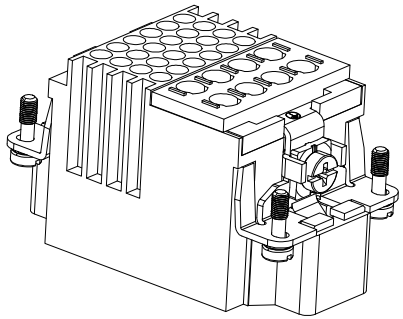

技术参数:
插芯:
- 插针数: 8/24+PE
- 额定电流:
  - 电力区: 16A
  - 信号区: 10A
- 额定电压:
  - 电力区: 230/400V
  - 信号区: 160V
- 额定脉冲电压:
  - 电力区: 4kV
  - 信号区: 2.5kV
- 污染等级: 3
- 依据UL/CSA的额定电压: 600V/300V
- 绝缘阻抗: $\geqslant 10^{10}\Omega$
- 材料: 聚碳酸酯
- 颜色: RAL 7032（浅灰色）
- 温度范围: -40℃ - +125℃
- 依据UL 94的阻燃等级: V0
- 可插拔次数: ≥500

插针:
- 接线方式: 冷压连接
- 材料: 铜合金
- 表面处理:
  - 镀银
  - 镀金
- 接触电阻:
  - 强电针: ≤1mΩ
  - 信号针: ≤3mΩ
- 线径范围:
  - 强电针: 0.5-4mm²(20-12 AWG)
  - 信号针: 0.14-2.5mm²(25-14 AWG)
- 工具:
  - 冷压钳:
    TL02G(0.14-4mm²)
    TL02(0.14-0.37mm²)
  - 退针器:
    TL00(10A冷压针)
    十字螺钉起子,规格尺寸0是依据DIN 5260(16A冷压针)

Technical specification:
Insters:
- No. of contact: 8/24+PE
- Rated current:
  - Power area: 16A
  - Signal area: 10A
- Rated voltage:
  - Power area: 230/400V
  - Signal area: 160V
- Rated impulse voltage:
  - Power area: 4kV
  - Signal area: 2.5kV
- Pollution degree: 3
- Rated voltage acc.to UL/CSA: 600V/300V
- Insulation resistance: $\geqslant 10^{10}\Omega$
- Material: polycarbonate
- Colour: RAL 7032(light grey)
- Temperature range: -40℃ - +125℃
- Flammability acc.to UL 94: V0
- Mating cycles: ≥500

Contacts:
- Terminal: crimp terminal
- Material: copper alloy
- Surface:
  - hard-silver plated
  - hard-gold plated
- Contact resistance:
  - Power contacts: ≤1mΩ
  - Signal contacts: ≤3mΩ
- Wire gauge:
  - Power contacts: 0.5-4mm²(20-12 AWG)
  - Signal contacts: 0.14-2.5mm²(26-14 AWG)
- Tools:
  - Crimp contact tool:
    TL02G(0.14-4mm²)
    TL02(0.14-0.37mm²)
  - Contact removal tool:
    TL00(for crimp contacts 10A)
    Cross-slotted screw driver,size 0 acc. to DIN 5260(for crimp contacts 16A)

ZJHK	浙江昊科电气有限公司 ZHEJIANG HAOKE ELECTRICAL CO.,LTD				图号 Drawing No:		／	
产品代号 Part Code:	HK-008/24-MC				产品料号 PART NO:		／	
Date:	2025.05.14	Scale	REV	Weight	Qty	Drawn:		SHEET
	All Dimensions in mm Original Size DIN A 4		HK-1	／	／	Tang		1/1

2:1