REVISIONS				
REV	ECN	DESCRIPTION	DATE	DRFT

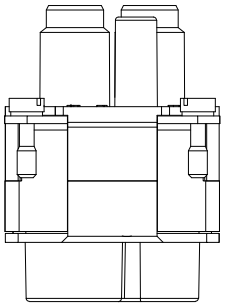

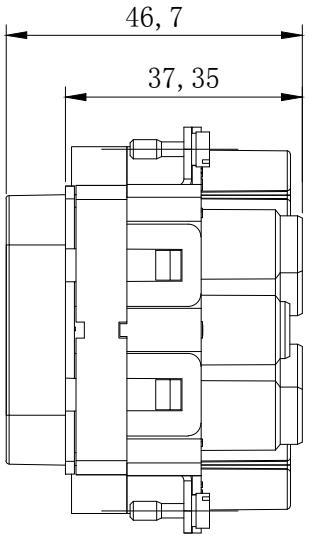

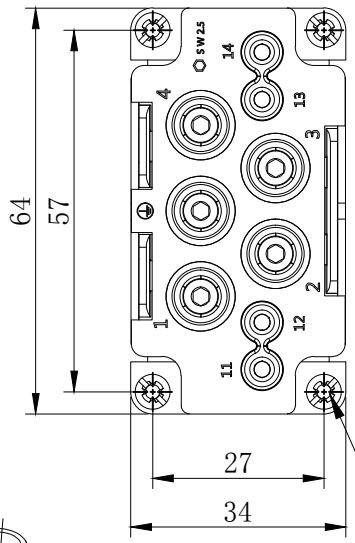

4XM3 SCREW,RECOMMENDED TIGHTENING TORQUE 0.5N.m

4XM3螺丝，推荐锁紧力矩0.5N.m

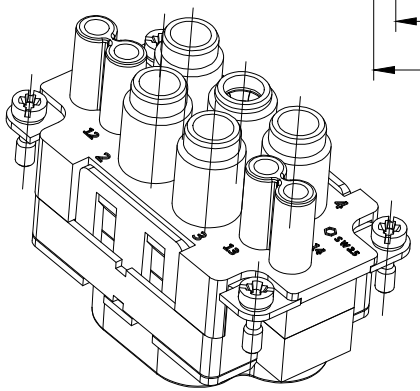

技术参数:

插芯:

- 插针数: 4/4+PE
- 额定电流:
  - 电力区: 63A
  - 信号区: 16A
- 额定电压:
  - 电力区: 690V
  - 信号区: 250V
- 额定脉冲电压:
  - 电力区: 8kV
  - 信号区: 4kV
- 污染等级: 3
- 依据UL/CSA的额定电压: 600V/230V
- 绝缘阻抗: ≥10^{10}Ω
- 材料: 聚碳酸酯
- 颜色: RAL 7032（浅灰色）
- 温度范围: −40℃ − +125℃
- 依据UL 94的阻燃等级: V0
- 可插拔次数: ≥500

插针:

- 接线方式: 轴向螺栓连接/弹片连接
- 材料: 铜合金
- 表面处理: 镀银
- 接触电阻:
  - 强电针: ≤0.5mΩ
  - 信号针: ≤3mΩ
- 线径范围:
  - 强电针: 14−22mm²(8−4 AWG)
  - 信号针: 0.14−2.5mm²(26−14 AWG)
- 最大电缆直径:
  - 强电针: 11mm
- 拧紧力矩:
  - 强电针:
    mm²: 16 22
    N·m: 4 5
- 剥线长度:
  - 强电针:
    mm²: 16 22
    mm: 11^{+1} 13^{+1}
  - 信号针: 7−9mm

Technical specification:

Insters:

- No. of contact: 4/4+PE
- Rated current:
  - Power area: 63A
  - Signal area: 16A
- Rated voltage:
  - Power area: 690V
  - Signal area: 250V
- Rated impulse voltage:
  - Power area: 8kV
  - Signal area: 4kV
- Pollution degree: 3
- Rated voltage acc.to UL/CSA: 600V/230V
- Insulation resistance: ≥10^{10}Ω
- Material: polycarbonate
- Colour: RAL 7032(light grey)
- Temperature range: −40℃ − +125℃
- Flammability acc.to UL 94: V0
- Mating cycles: ≥500

Contacts:

- Terminal: axial screw terminal/spring terminal
- Material: copper alloy
- Surface: hard−silver plated
- Contact resistance:
  - Power contacts: ≤0.5mΩ
  - Signal contacts: ≤3mΩ
- Wire gauge:
  - Power contacts: 14−22mm²(8−4 AWG)
  - Signal contacts: 0.14−2.5mm²(26−14 AWG)
- Max. insulation diameter:
  - Power contacts: 11mm
- Tightening tourque:
  - Power contacts:
    mm²: 16 22
    N·m: 4 5
- Stripping length:
  - Power contacts:
    mm²: 16 22
    mm: 11^{+1} 13^{+1}
  - Signal contacts: 7−9mm

ZJHK	浙江昊科电气有限公司 ZHEJIANG HAOKE ELECTRICAL CO.,LTD				图号 Drawing No:		／	
产品代号 Part Code:	HK−004.2/4−F(14−22mm²)				产品料号 PART NO:		／	
Date:	2025.05.14	Scale	REV	Weight	Qty	Drawn:		SHEET
	All Dimensions in mm Original Size DIN A 4	2:1	HK−1	／	／	Tang		1/1