REVISIONS				
REV	ECN	DESCRIPTION	DATE	DRFT

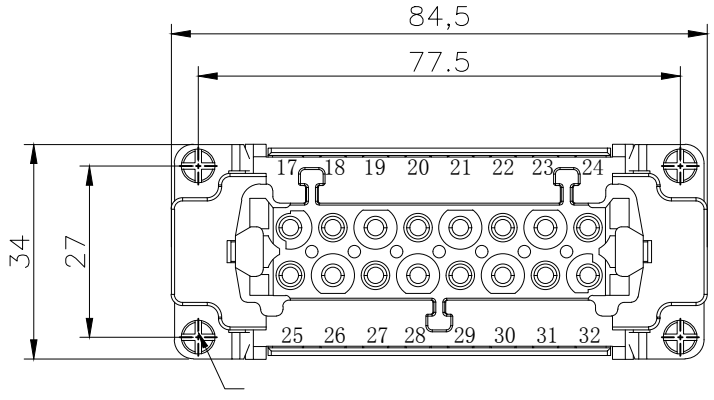

4XM3 SCREW,RECOMMENDED
TIGHTENING TORQUE 0.5N.m
4XM3螺丝，推荐锁紧力矩0.5N.m

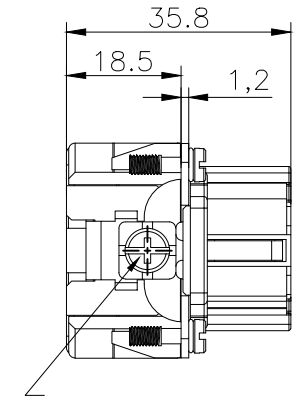

M4 SCREW,RECOMMENDED
TIGHTENING TORQUE 1.2N.m
M4螺丝，推荐锁紧力矩1.2N.m

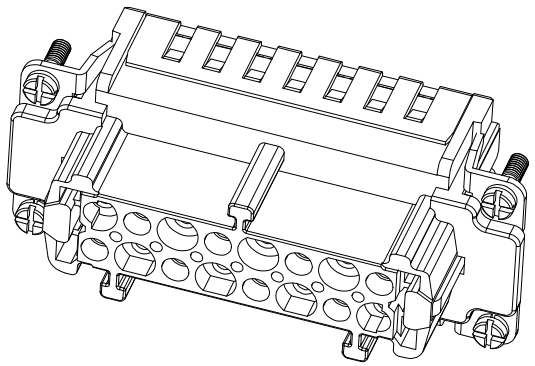

技术参数:
插芯:
- 插针数: 16+PE
- 额定电流: 16A
- 额定电压: 500V
- 额定脉冲电压: 6kV
- 污染等级: 3
- 依据UL/CSA的额定电压: 600V
- 绝缘阻抗: ≥10^{10}Ω
- 材料: 聚碳酸酯
- 颜色: RAL 7032（浅灰色）
- 温度范围: −40℃ − +125℃
- 依据UL 94的阻燃等级: V0
- 可插拔次数: ≥500

插针:
- 接线方式: 冷压连接
- 材料: 铜合金
- 表面处理:
  - 镀银
  - 银金
- 接触电阻: ≤1mΩ
- 线径范围: 0.14−4.0mm^2(26−12 AWG)
- 剥线长度: 7.5mm
- 工具:
  - 冷压钳: TL02G(0.14−4mm^2)
  - 退针器: TL01

Technical specification:
Inserts:
- No. of contact: 16+PE
- Rated current: 16A
- Rated voltage: 500V
- Rated impulse voltage: 6kV
- Pollution degree: 3
- Rated voltage acc.to UL/CSA: 600V
- Insulation resistance: ≥10^{10}Ω
- Material: polycarbonate
- Colour: RAL 7032(light grey)
- Temperature range: −40 − +125
- Flammability acc.to UL 94: V0
- Mating cycles: ≥500

Contacts:
- Terminal: crimp terminal
- Material: copper alloy
- Surface:
  - Hard−silver plated
  - Hard−gold plated
- Contact resistance: ≤1mΩ
- Wire gauge: 0.14−4.0mm^2(26−12 AWG)
- Stripping length: 7.5mm
- Tools:
  - Crimp contact tool: TL02G(0.14−4mm^2)
  - Contact removal tool: TL01

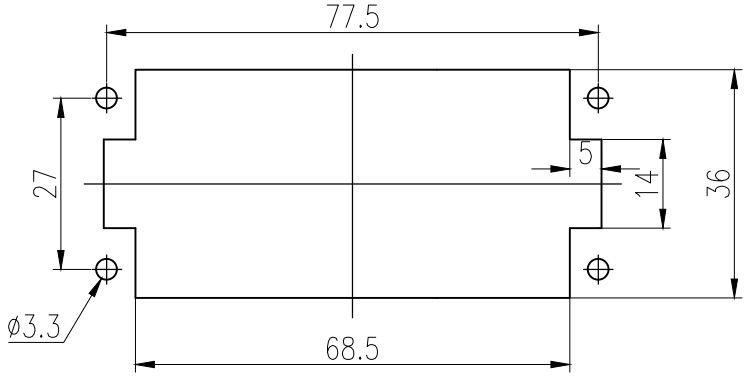

面板安装开孔图
Panel cut out

ZJHK	浙江昊科电气有限公司 ZHEJIANG HAOKE ELECTRICAL CO.,LTD				图号 Drawing No:	/	
产品代号 Part Code:	HE−016−FC(17−32)				产品料号 PART NO:	09330162712	
Date:	2025.01.15	Scale	REV	Weight	Qty	Drawn:	SHEET
	All Dimensions in mm Original Size DIN A 4	2:1	HK−1	/	/	Tang	1/1