REVISIONS				
REV	ECN	DESCRIPTION	DATE	DRFT

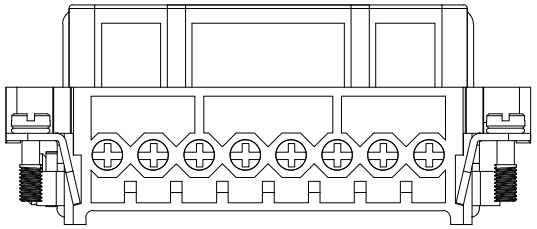

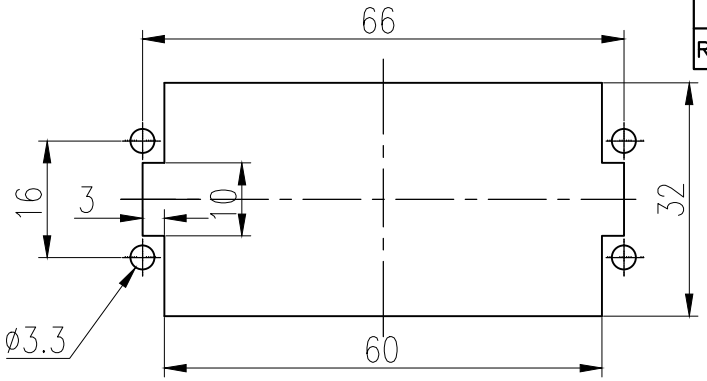

面板安装开孔图
Panel cut out

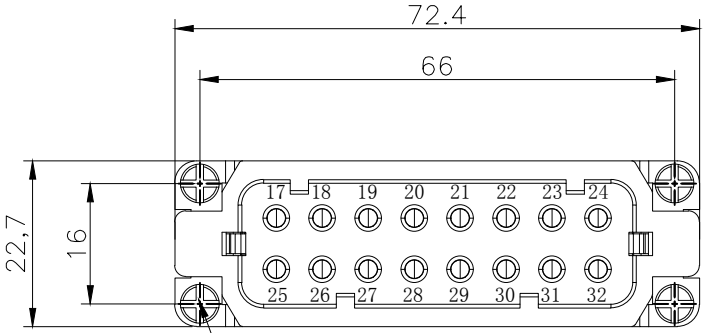

4XM3 SCREW,RECOMMENDED
TIGHTENING TORQUE 0.5N.m
4XM3螺丝，推荐锁紧力矩0.5N.m

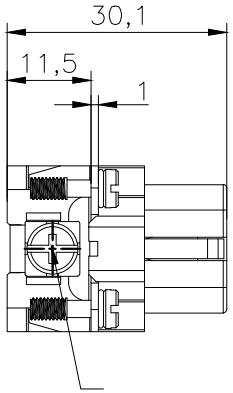

M3.5 SCREW,RECOMMENDED
TIGHTENING TORQUE 0.8N.m
M3.5螺丝，推荐锁紧力矩0.8N.m

技术参数:
插芯:
- 插针数: 16+PE
- 额定电流: 16A
- 额定电压: 250V
- 额定脉冲电压: 4kV
- 污染等级: 3
- 依据UL/CSA的额定电压: 600V
- 绝缘阻抗: ≥10^{10}Ω
- 材料: 聚碳酸酯
- 颜色: RAL 7032（浅灰色）
- 温度范围: -40℃ - +125℃
- 依据UL 94的阻燃等级: V0
- 可插拔次数: ≥500

插针:
- 接线方式: 螺钉连接
- 材料: 铜合金
- 表面处理: 镀银
- 接触电阻: ≤1mΩ
- 线径范围: 0.75-2.5mm^2(18-14 AWG)
- 拧紧力矩: 0.5N·m
- 剥线长度: 7.5mm
- 带导线保护: 否

Technical specification:
Insters:
- No. of contact: 16+PE
- Rated current: 16A
- Rated voltage : 250V
- Rated impulse voltage: 4kV
- Pollution degree: 3
- Rated voltage acc.to UL/CSA: 600V
- Insulation resistance: ≥10^{10}Ω
- Material: polycarbonate
- Colour: RAL 7032(light grey)
- Temperature range: -40℃ - +125℃
- Flammability acc.to UL 94: V0
- Mating cycles: ≥500

Contacts:
- Terminal: screw terminal
- Material: copper alloy
- Surface: hard-silver plated
- Contact resistance: ≤1mΩ
- Wire gauge: 0.75-2.5mm^2(18-14 AWG)
- Tightening torque: 0.5N·m
- Stripping length: 7.5mm
- Wire protection: No

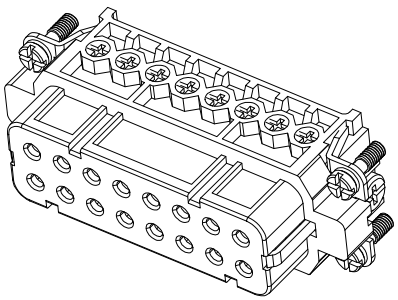

ZJHK 浙江昊科电气有限公司 ZHEJIANG HAOKE ELECTRICAL CO.,LTD					图号 Drawing No:	／	
产品代号 Part Code:	HA-016-F(17-32)				产品料号 PART NO:	09200162813	
Date:	2025.01.14	Scale	REV	Weight	Qty	Drawn:	SHEET
	All Dimensions in mm Original Size DIN A 4	2:1	HK-1	／	／	Tang	1/1